Ultra High Ratio Si Hyperabrupt Varactor Diode

MA4ST2000 Series
V7

Features

- Ultra High Capacitance Ratio,
  C(0.1V)/C(4.7V) =18:1
  C(0.1V)/C(2.7V) = 12:1
- Surface Mount Plastic Packages : SC-79, SOD-323, SC-70, 3 Lead
- SPC Process for Superior C vs V and Q vs V Repeat-ability
- Lead-Free (RoHs Compliant) equivalents available with 260°C reflow compatibility

Description and Applications

M/A-COM's MA4ST2000 series is a highly repeatable, UHCVD/ion-implanted, hyperabrupt silicon tuning varactor in a cost effective surface mount package. This series of varactors is designed for high capacitance ratio for low battery voltage operation. It is efficient for wide band tuning and low phase noise application where the supply voltage is limited to 5 volts or less. Varactors in this series have a typical 18:1 capacitance ratio between 0.1 V and 4.7 V and a 12:1 ratio between 0.1 V and 2.7 V. The Varactors are offered as Singles in both SC-79 and SOD-323 configurations with Common Cathode version offered in a SC-70, 3 Lead. These diodes are offered with standard Sn/Pb plating , as well as 100% matte Sn plating on our RoHs compliant equivalent devices.

SC-70 (3

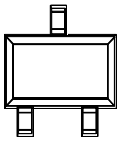

SOD-323

SC-79

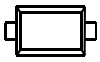

Absolute Maximum Ratings @ T_A=+25 °C (Unless Otherwise Noted) [1]

Parameter	Absolute Maximum
Reverse Voltage	12 V
Forward Current	50 mA
Operating Temperature	-55 °C to +125 °C
Storage Temperature	-55 °C to +125 °C

1. Operation of this device above any one of these parameters may cause permanent damage.
2. Please refer to application note M538 for surface mounting instructions

Part Number	RoHs Compliant Part Number	Configuration	Package	Package Cp (pF)	Package Ls (nH)
	MAVR-002200-12790T	Single	SC-79	0.10	0.6
	MAVR-002300-12790T	Single	SC-79	0.10	0.6
	MAVR-002400-12790T	Single	SC-79	0.10	0.6
	MAVR-002500-12790T	Single	SC-79	0.10	0.6
	MAVR-002600-12790T	Single	SC-79	0.10	0.6
MA4ST2200-1141T	MAVR-002200-11410T	Single	SOD-323	0.11	1.2
MA4ST2300-1141T	MAVR-002300-11410T	Single	SOD-323	0.11	1.2
MA4ST2400-1141T	MAVR-002400-11410T	Single	SOD-323	0.11	1.2
MA4ST2500-1141T	MAVR-002500-11410T	Single	SOD-323	0.11	1.2
MA4ST2600-1141T	MAVR-002600-11410T	Single	SOD-323	0.11	1.2
MA4ST2200CK-1146T	MAVR-002200-1146FT	Common Cathode	SC-70 (3L)	0.12	1.3
MA4ST2300CK-1146T	MAVR-002300-1146FT	Common Cathode	SC-70 (3L)	0.12	1.3
MA4ST2400CK-1146T	MAVR-002400-1146FT	Common Cathode	SC-70 (3L)	0.12	1.3
MA4ST2500CK-1146T	MAVR-002500-1146FT	Common Cathode	SC-70 (3L)	0.12	1.3
MA4ST2600CK-1146T	MAVR-002600-1146FT	Common Cathode	SC-70 (3L)	0.12	1.3

M/A-COM Inc. and its affiliates reserve the right to make changes to the product(s) or information contained herein without notice. M/A-COM makes no warranty, representation or guarantee regarding the suitability of its products for any particular purpose, nor does M/A-COM assume any liability whatsoever arising out of the use or application of any product(s) or information.

- **North America** Tel: 800.366.2266 / Fax: 978.366.2266
- **Europe** Tel: 44.1908.574.200 / Fax: 44.1908.574.300
- **Asia/Pacific** Tel: 81.44.844.8296 / Fax: 81.44.844.8298

Visit www.macom.com for additional data sheets and product information.

Ultra High Ratio Si Hyperabrupt Varactor Diode

Electrical Specifications @ T_A = +25 °C

Breakdown Voltage @ I_R = 10μA, V_b = 12 V Minimum
Reverse Leakage Current @ V_R =10V, I_R = 100 nA Maximum

Part Number	Equivalent RoHs Compliant Part Number	Ct* (pF)						Capacitance Ratio		Rs** (Ohm)	
		V_R = 0.1 V	V_R = 1.0 V			V_R = 2.7V	V_R = 4.7 V	$Ct_{0.1}/Ct_{4.7}$	$Ct_{0.1}/Ct_{2.7}$	V_R = 4.0 V	
		Typ.	Min.	Nom.	Max.	Typ.	Typ.	Typ.	Typ.	Typ.	Max.
MA4ST2200	MAVR-002200-XXXXXX[1]	7.68	3.66	4.07	4.48	0.70	0.47	16.3	11.0	3.84	4.6
MA4ST2300	MAVR-002300-XXXXX[1]	34.2	16.2	18.0	19.8	2.67	1.85	18.5	12.8	0.95	1.2
MA4ST2400	MAVR-002400-XXXXXX[1]	60.3	28.6	31.8	34.9	4.98	3.27	18.4	12.1	0.67	0.9
MA4ST2500	MAVR-002500-XXXXXX[1]	86.4	41.4	46.0	50.6	6.68	4.64	18.6	12.9	0.61	0.8
MA4ST2600	MAVR-002600-XXXXXX[1]	113.3	54.3	60.3	66.4	9.14	6.27	18.1	12.4	0.54	0.7

[1] The suffix defines package style, configuration and packaging information. Contact representative for complete part identification.

Typical Capacitance vs. Biasing Voltage

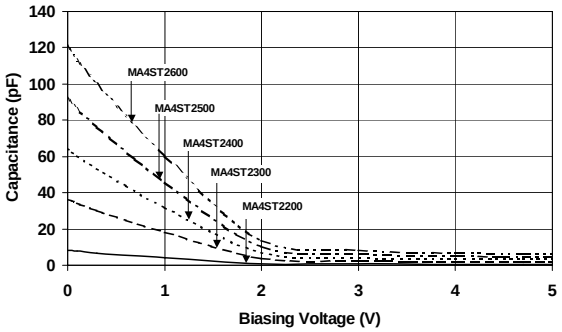

Typical Series Resistance vs. Biasing Voltage

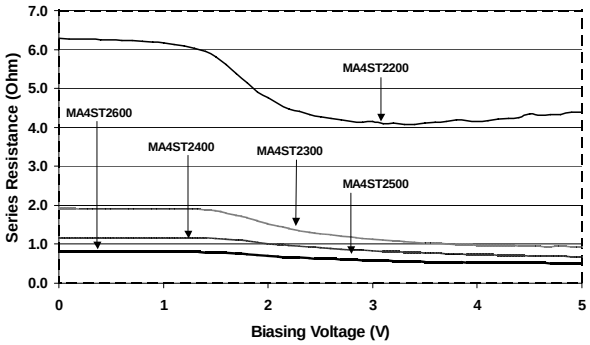

Typical Series Resistance vs. Frequency

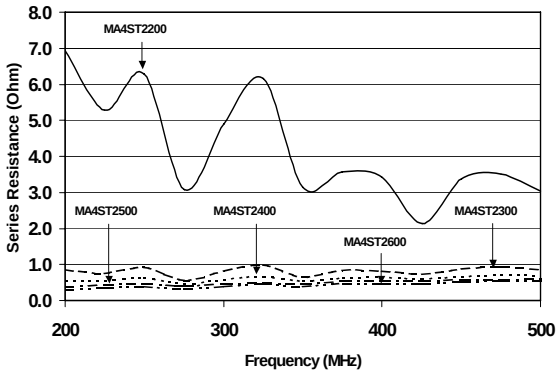

Typical Capacitance Change vs. Temperature

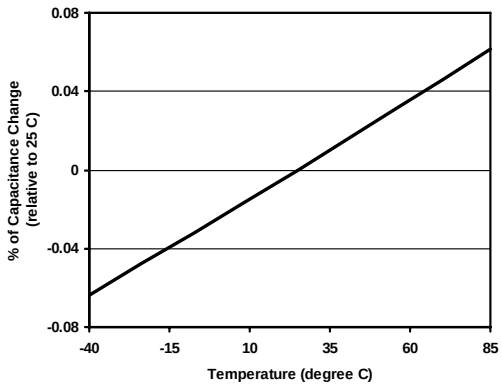

M/A-COM Inc. and its affiliates reserve the right to make changes to the product(s) or information contained herein without notice. M/A-COM makes no warranty, representation or guarantee regarding the suitability of its products for any particular purpose, nor does M/A-COM assume any liability whatsoever arising out of the use or application of any product(s) or information.

- **North America** Tel: 800.366.2266 / Fax: 978.366.2266
- **Europe** Tel: 44.1908.574.200 / Fax: 44.1908.574.300
- **Asia/Pacific** Tel: 81.44.844.8296 / Fax: 81.44.844.8298

Visit www.macom.com for additional data sheets and product information.

Ultra High Ratio Si Hyperabrupt Varactor Diode

Typical Capacitance Values

V_R (V)	MA4ST2200 MAVR-002200-XXXXXX	MA4ST2300 MAVR-002300-XXXXX MAVR-002301-11410T	MA4ST2400 MAVR-002400-XXXXXX	MA4ST2500 MAVR-002500-XXXXXX	MA4ST2600 MAVR-002600-XXXXXX
	Ct (pF)	Ct (pF)	Ct (pF)	Ct (pF)	Ct (pF)
0.1	7.643	34.06	60.26	86.48	113.09
0.3	6.746	30.07	53.12	76.34	99.80
0.5	5.948	26.56	46.81	67.36	88.07
1.0	4.006	18.00	31.75	46.09	60.31
1.5	1.895	8.313	15.52	22.83	30.21
2.0	0.985	3.941	7.470	10.05	13.94
2.5	0.744	2.889	5.407	7.112	9.952
3.0	0.638	2.429	4.512	5.918	8.274
3.5	0.579	2.166	4.000	5.275	7.332
4.0	0.543	1.993	3.663	4.895	6.749
4.5	0.517	1.845	3.370	4.691	6.317
5.0	0.469	1.771	3.200	4.557	6.086

Spice Model

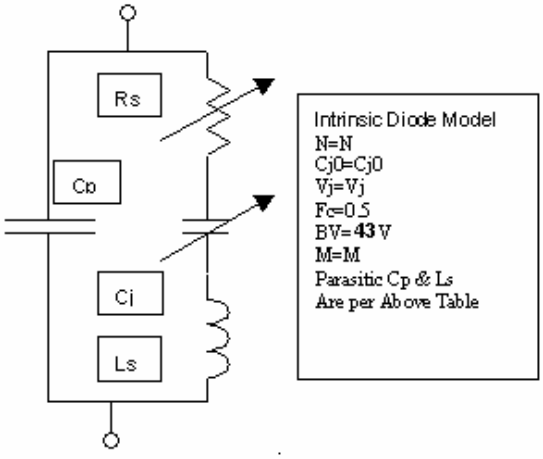

Part Number	N	CJO (pF)	Vj (V)	M	Rs (Ω)
MA4ST2200 MAVR-002200-XXXXXX	1.261	10.2	12.62	18.60	1.114
MA4ST2300 MAVR-002300-XXXXXX MAVR-002301-11410T	1.210	46.8	2.450	4.268	1.085
MA4ST2400 MAVR-002400-XXXXXX	1.158	84.6	1.322	2.632	0.903
MA4ST2500 MAVR-002500-XXXXXX	1.204	100	1.616	2.700	0.842
MA4ST2600 MAVR-002600-XXXXXX	1.196	159	1.169	2.270	0.910

M/A-COM Inc. and its affiliates reserve the right to make changes to the product(s) or information contained herein without notice. M/A-COM makes no warranty, representation or guarantee regarding the suitability of its products for any particular purpose, nor does M/A-COM assume any liability whatsoever arising out of the use or application of any product(s) or information.

- **North America** Tel: 800.366.2266 / Fax: 978.366.2266
- **Europe** Tel: 44.1908.574.200 / Fax: 44.1908.574.300
- **Asia/Pacific** Tel: 81.44.844.8296 / Fax: 81.44.844.8298

Visit www.macom.com for additional data sheets and product information.

Ultra High Ratio Si Hyperabrupt Varactor Diode

Case Styles

SOD-323
Case Style 1141

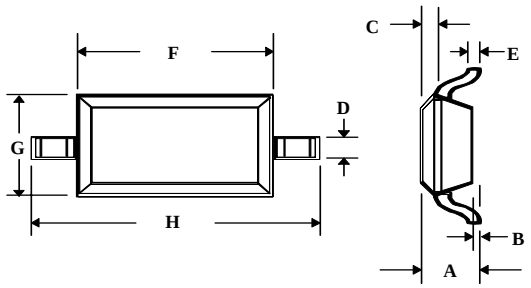

	INCHES		MILLIMETERS	
DIM.	MIN.	MAX.	MIN.	MAX.
A	—	0.043	—	1.1
B	—	0.004	—	0.1
C	—	0.008	—	0.2
D	0.010	0.016	0.25	0.4
E	0.003	0.006	0.08	0.15
F	0.063	0.075	1.6	1.9
G	0.045	0.057	1.15	1.45
H	0.091	0.106	2.3	2.7

SC-70, 3 Lead
Case Style 1146

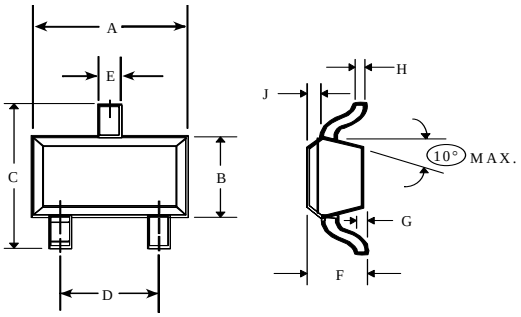

	INCHES		MILLIMETERS	
DIM.	MIN.	MAX.	MIN.	MAX.
A	0.071	0.087	1.80	2.20
B	0.045	0.053	1.15	1.35
C	0.071	0.094	1.80	2.40
D	0.047	0.057	1.19	1.45
E	0.010	0.016	0.25	0.41
F	0.031	0.039	0.80	1.00
G	0.000	0.004	0.00	0.10
H	0.004	0.007	0.10	0.18
J	0.004	0.010	0.10	0.25

SC-79
Case Style 1279

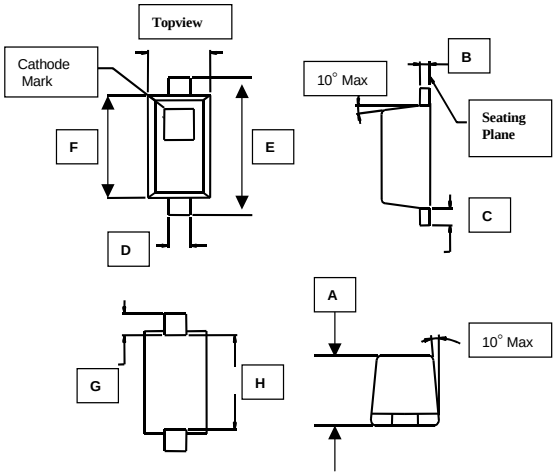

	INCHES		MILLIMETERS	
DIM.	MIN.	MAX.	MIN.	MAX.
A	0.020	0.028	0.50	0.71
B	0.003	0.008	0.08	0.20
C	0.006	0.010	0.15	0.25
D	0.010	0.014	0.25	0.36
E	0.059	0.067	0.08	0.15
F	0.043	0.051	1.50	1.30
G	0.011	0.012	0.28	0.30
H	0.037 typical	0.043	0.94	1.09

M/A-COM Inc. and its affiliates reserve the right to make changes to the product(s) or information contained herein without notice. M/A-COM makes no warranty, representation or guarantee regarding the suitability of its products for any particular purpose, nor does M/A-COM assume any liability whatsoever arising out of the use or application of any product(s) or information.

- **North America** Tel: 800.366.2266 / Fax: 978.366.2266
- **Europe** Tel: 44.1908.574.200 / Fax: 44.1908.574.300
- **Asia/Pacific** Tel: 81.44.844.8296 / Fax: 81.44.844.8298

Visit www.macom.com for additional data sheets and product information.

Mounting Information

The illustration indicates the recommended mounting pad configuration for the SC-79, SOT-323 and SOD-323 packages. Solder paste containing flux should be screened onto the pads to a thickness of 0.005- 0.007 inches. The plastic package is placed in position, firmly adhering to the solder paste.

Permanent attachment is performed by a reflow soldering procedure during which the tab temperature does not exceed +275 °C and the body temperature does not exceed +250 °C, for standard models and +260 °C for the RoHS compliant devices.

Please refer to Application Note M538 for surface mounting instructions.

SC-79

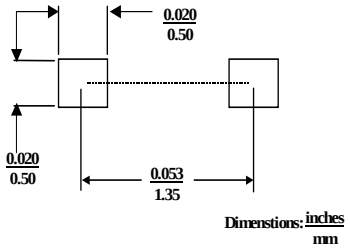

SOT-323

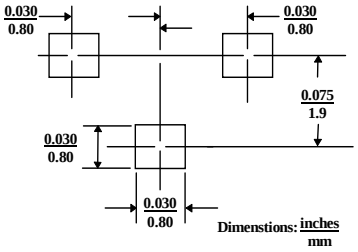

SOD-323

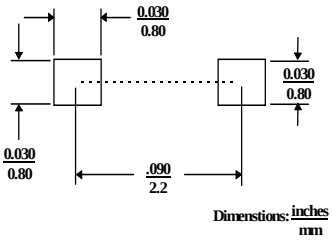

M/A-COM Inc. and its affiliates reserve the right to make changes to the product(s) or information contained herein without notice. M/A-COM makes no warranty, representation or guarantee regarding the suitability of its products for any particular purpose, nor does M/A-COM assume any liability whatsoever arising out of the use or application of any product(s) or information.

- **North America** Tel: 800.366.2266 / Fax: 978.366.2266
- **Europe** Tel: 44.1908.574.200 / Fax: 44.1908.574.300
- **Asia/Pacific** Tel: 81.44.844.8296 / Fax: 81.44.844.8298